Network Dome Camera

Quick Operation Guide

Thank you for purchasing our product. If there are any questions, or requests, please do not hesitate to contact the dealer.

About This Document

This manual may contain several technical incorrect places or printing errors, and the content is subject to change without notice. The updates will be added to the new version of this manual. We will readily improve or update the products or procedures described in the manual.

DISCLAIMER STATEMENT

"Underwriters Laboratories Inc. ("UL") has not tested the performance or reliability of the security or signaling aspects of this product. UL has only tested for fire, shock or casualty hazards as outlined in UL's Standard(s) for Safety, UL60950-1. UL Certification does not cover the performance or reliability of the security or signaling aspects of this product. UL MAKES NO REPRESENTATIONS, WARRANTIES OR CERTIFICATIONS WHATSOEVER REGARDING THE PERFORMANCE OR RELIABILITY OF ANY SECURITY OR SIGNALING RELATED FUNCTIONS OF THIS PRODUCT.

Regulatory Information

FCC Information

FCC compliance: This equipment has been tested and found to comply with the limits for a digital device, pursuant to part 15 of the FCC Rules. These limits are designed to provide reasonable protection against harmful interference when the equipment is operated in a commercial environment. This equipment generates, uses, and can radiate radio frequency energy and, if not installed and used in accordance with the instruction manual, may cause harmful interference to radio communications. Operation of this equipment in a residential area is likely to cause harmful interference in which case the user will be required to correct the interference at his own expense.

FCC Conditions

This device complies with part 15 of the FCC Rules. Operation is subject to the following two conditions:

1. This device may not cause harmful interference.

2. This device must accept any interference received, including interference that may cause undesired operation.

EU Conformity Statement

This product and - if applicable - the supplied accessories too are marked with "CE" and comply therefore with the applicable harmonized European standards listed under the Low Voltage Directive 2006/95/EC, the EMC Directive 2004/108/EC, the RoHS Directive 2011/65/EU.

2012/19/EU (WEEE directive): Products marked with this symbol cannot be disposed of as unsorted municipal waste in the European Union. For proper recycling, return this product to your local supplier upon the purchase of equivalent new equipment, or dispose of it at designated collection points. For more information see: www.recyclethis.info.

2006/66/EC (battery directive): This product contains a battery that cannot be disposed of as unsorted municipal waste in the European Union. See the product documentation for specific battery information. The battery is marked with this symbol, which may include lettering to indicate cadmium (Cd), lead (Pb), or mercury (Hg). For proper recycling, return the battery to your supplier or to a designated collection point. For more information see: www.recyclethis.info

Safety Instruction

These instructions are intended to ensure that user can use the product correctly to avoid danger or property loss.

The precaution measure is divided into “Warnings” and “Cautions”

Warnings: Serious injury or death may occur if any of the warnings are neglected.

Cautions: Injury or equipment damage may occur if any of the cautions are neglected.

Warnings Follow these safeguards to prevent serious injury or death.	**Cautions** Follow these precautions to prevent potential injury or material damage.

Warnings

- In the use of the product, you must be in strict compliance with the electrical safety regulations of the nation and region. Please refer to technical specifications for detailed information.
- Input voltage should meet both the SELV (Safety Extra Low Voltage) and the Limited Power Source with 24 VAC or 12 VDC according to the IEC60950-1 standard. Please refer to technical specifications for detailed information.

- Do not connect several devices to one power adapter as adapter overload may cause over-heating or a fire hazard.
- Please make sure that the plug is firmly connected to the power socket. When the product is mounted on wall or ceiling, the device shall be firmly fixed.
- If smoke, odor or noise rise from the device, turn off the power at once and unplug the power cable, and then please contact the service center.

Cautions

- Make sure the power supply voltage is correct before using the camera.
- Do not drop the camera or subject it to physical shock.
- Do not touch sensor modules with fingers. If cleaning is necessary, use clean cloth with a bit of ethanol and wipe it gently. If the camera will not be used for an extended period, please replace the lens cap to protect the sensor from dirt.
- Do not aim the camera at the sun or extra bright places. Blooming or smearing may occur otherwise (which is not a malfunction), and affect the endurance of sensor at the same time.
- The sensor may be burned out by a laser beam, so when any laser equipment is in using, make sure that the surface of sensor will not be exposed to the laser beam.

- Do not place the camera in extremely hot, cold (the operating temperature shall be-30℃~+60℃,or -40°C ~ 60°C if the camera model has an “H” in its suffix), dusty or damp locations, and do not expose it to high electromagnetic radiation.
- To avoid heat accumulation, good ventilation is required for operating environment.
- Keep the camera away from liquid while in use.
- While in delivery, the camera shall be packed in its original packing, or packing of the same texture.
- Regular part replacement: a few parts (e.g. electrolytic capacitor) of the equipment shall be replaced regularly according to their average enduring time. The average time varies because of differences between operating environment and using history, so regular checking is recommended for all the users. Please contact with your dealer for more details.
- Improper use or replacement of the battery may result in hazard of explosion. Replace with the same or equivalent type only. Dispose of used batteries according to the instructions provided by the battery manufacturer.
- If the product does not work properly, please contact your dealer or the nearest service center. Never attempt to disassemble the camera yourself. (We shall not assume any responsibility for problems caused by unauthorized repair or maintenance.)

Table of Contents

1 Appearance Description 8

2 Installation 11

2.1 Disassembling 12

2.2 Mounting 13

2.2.1 Ceiling Mounting 13

2.2.2 Ceiling Mounting with Gang Box 17

2.2.3 Wall Mounting 20

2.3 Image and Focus Adjusting 23

3 Setting the Network Camera over the LAN 26

4 Accessing via Web Browser 31

1 Appearance Description

The overview of the network dome camera is shown below.

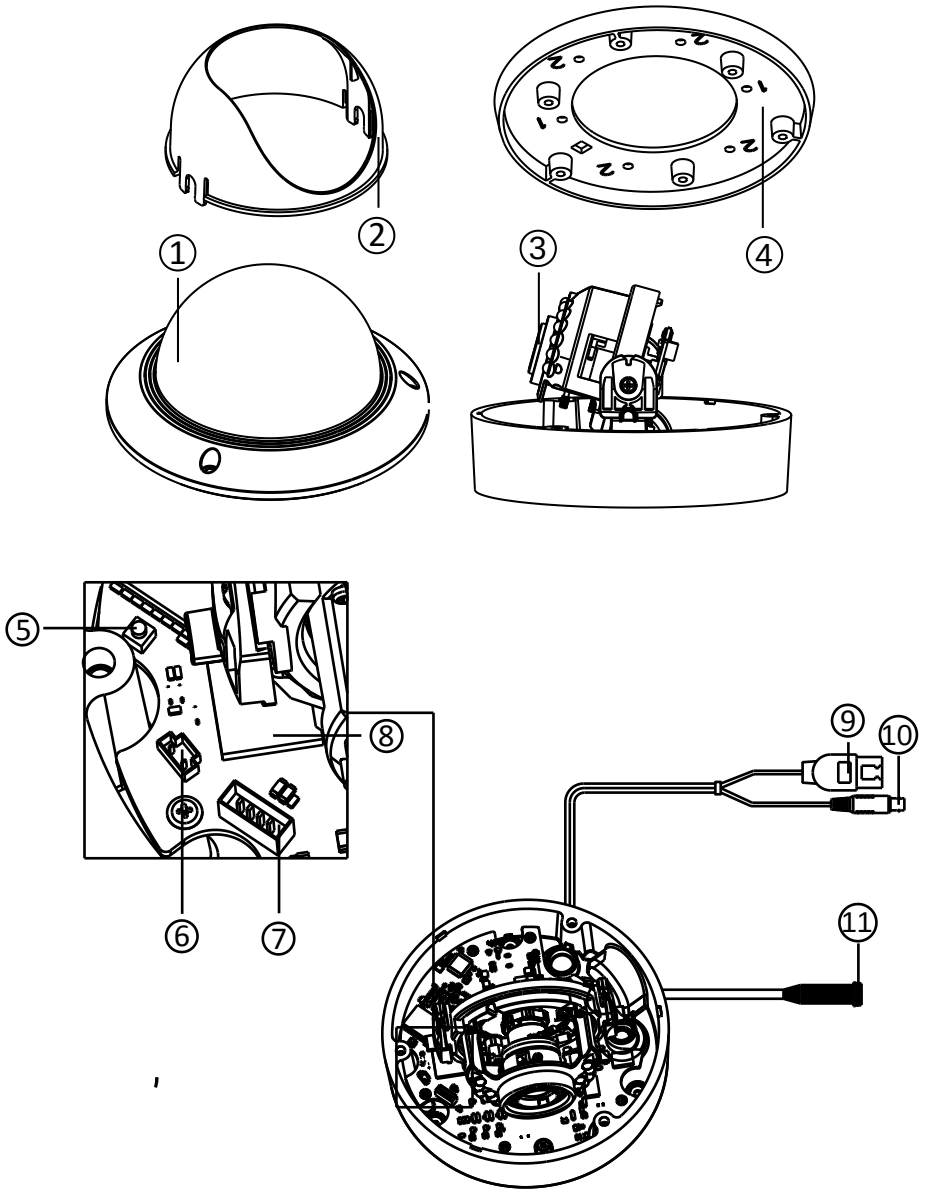

Figure 1-1 Overview

Table 1-1 Description

No.	Description
1	Bubble
2	Black Liner
3	Lens
4	Mounting Base
5	Reset
6	Auxiliary Video Output
7	Serial Port
8	Micro SD Card Slot
9	Network Cable
10	Power Cable
11	Audio/Alarm Interface

NOTE

- Press RESET about 10s when the camera is powering on or rebooting to restore the default settings, including the user name, password, IP address, and port No., etc.
- Some of the models support audio and alarm functions. The interfaces are shown as follows.

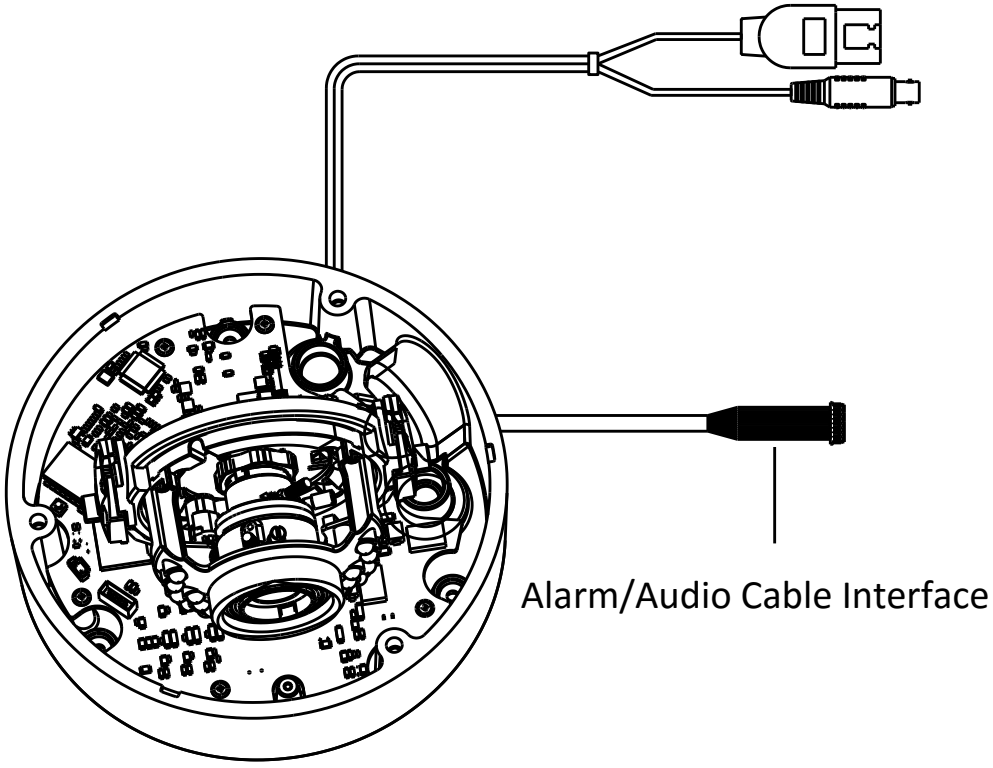

Figure 1-2 Audio and Alarm Interfaces

2 Installation

Before you start:

- Make sure the device in the package is in good condition and all the assembly parts are included.
- Make sure all the related equipment is power-off during the installation.
- Check the specification of the products for the installation environment.
- Make sure the power supply is matched with your required voltage to avoid damage.
- If the product does not function properly, please contact your dealer or the nearest service center. Do not disassemble the camera for repair or maintenance by yourself.
- Make sure that the wall is strong enough to withstand three times the weight of the camera.

For the camera that supports IR, you are required to pay attention to the following precautions to prevent IR reflection:

- Dust or grease on the dome cover will cause IR reflection. Please do not remove the dome cover film until the installation is finished. If there is dust or grease on the dome cover, clean the dome cover with clean soft cloth and isopropyl alcohol.

- Make sure that there is no reflective surface too close to the camera lens. The IR light from the camera may reflect back into the lens causing reflection.
- The foam ring around the lens must be seated flush against the inner surface of the bubble to isolate the lens from the IR LEDS. Fasten the dome cover to camera body so that the foam ring and the dome cover are attached seamlessly.

2.1 **Disassembling**

Steps:

1. Loosen the three screws on the edge of the bubble with the screw driver.
2. Open the bubble and remove the inner black liner as shown in Figure 2-1.

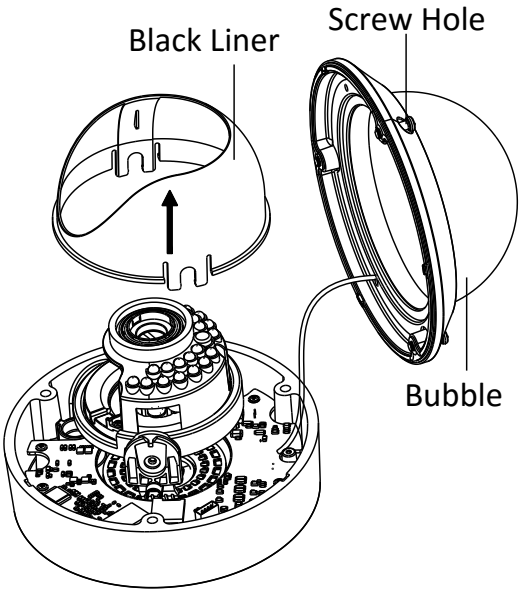

Figure 2-1 Remove the Bubble and Black Liner

2.2 **Mounting**

Ceiling Mounting

Steps:

1. Disassemble the camera. Refer to the section 2.1.
2. Attach the drill template (supplied) to the place where you want to fix the camera.
3. According to the drill template as shown in Figure 2-2, drill three screw holes in the ceiling.

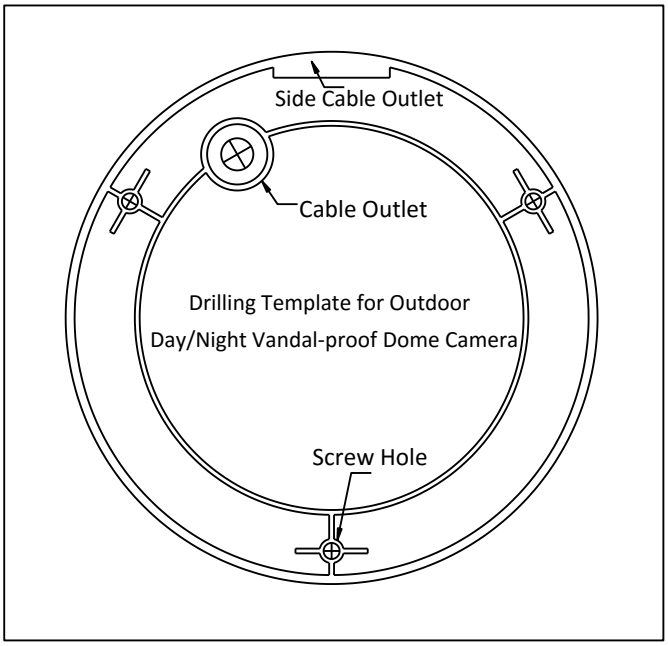

Figure 2-2 The Drill Template

4. If you want to route the cables inside the ceiling, drill a cable hole in the ceiling according to the drill template. Skip this step if you

want to route the cables on the surface of the ceiling. Refer to **Conduit Installation on the Side** for side cable routing.

5. Attach the camera to the ceiling by aligning the holes of the back box with the holes on the ceiling.
6. Secure the camera with the supplied screws as shown in Figure 2-3.

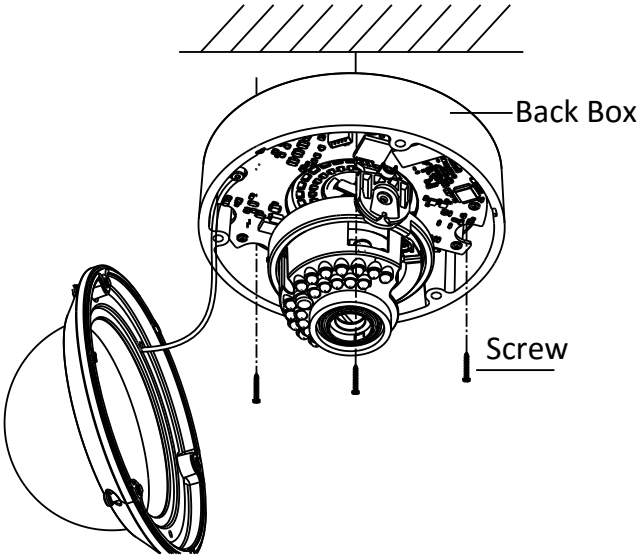

Figure 2-3 Secure the Camera

7. Route the cables through the cable hole.
8. Connect the video output connector to the monitor. Connect the power connector to the power supply.
9. Adjust the image and focus. Please refer to the section 2.3 for more detailed information.
10. Install the inner black liner back to the camera.
11. Install the bubble back to the camera and secure it with screws as shown in Figure 2-4.

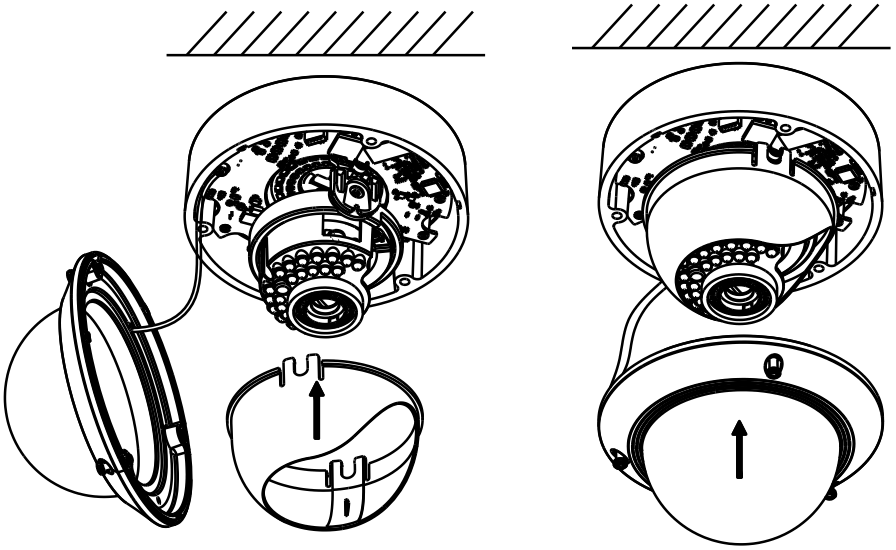

Figure 2-4 Secure Black Liner and Bubble

Conduit Installation on the Side

If you want to route the cables from side of the camera, you need to follow the steps below to install a conduit for cable routing.

Steps:

1. Rotate the water-proof plug counterclockwise to remove it from the camera.

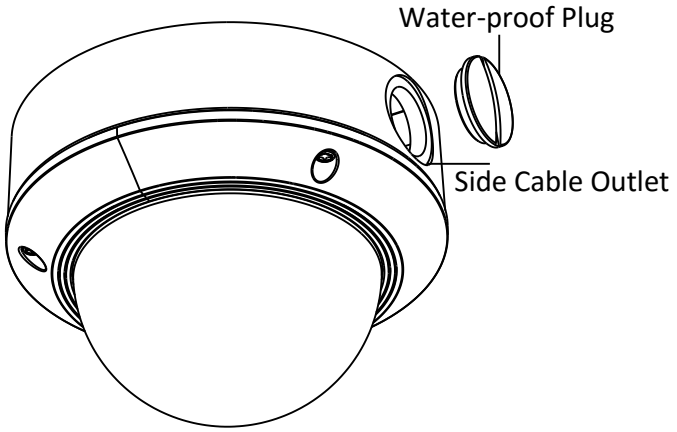

Figure 2-5 Remove the water-proof plug

2. Route the power cable and network cable through the side outlet to the conduit.
3. Align and rotate clockwise the conduit to the side outlet tightly.

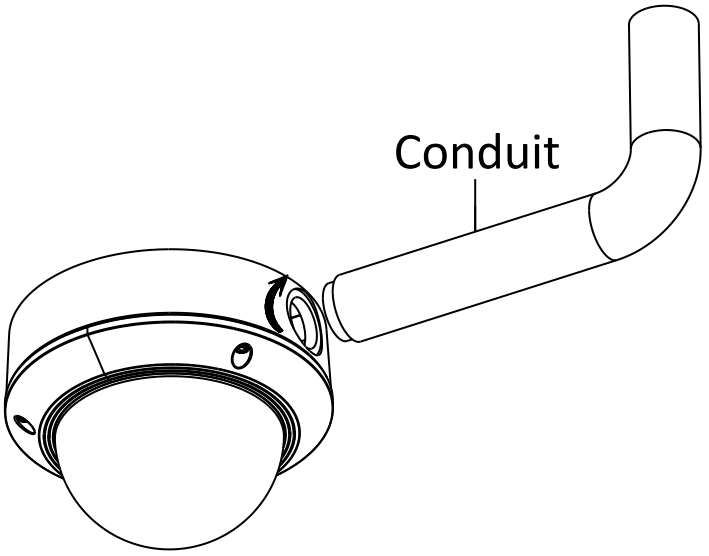

Figure 2-6 Install the Conduit to the Camera

For wall mounting, position the side outlet directly downward for water-proof.

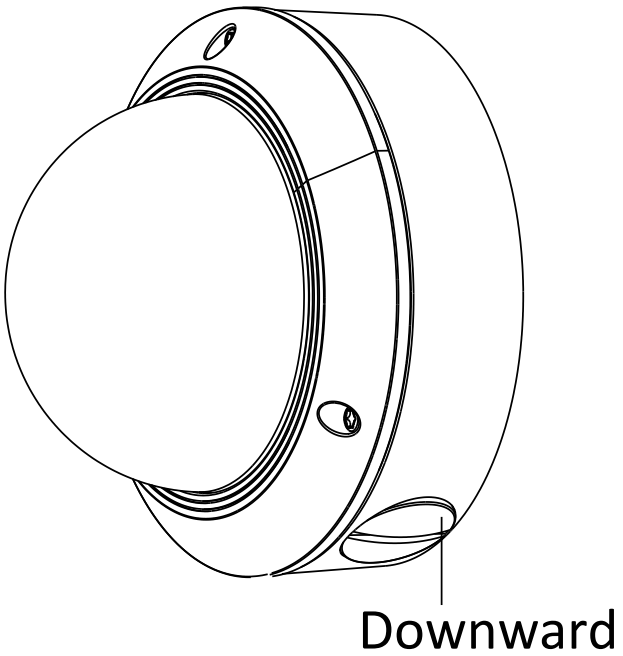

Figure 2-7 Side Outlet Direction

2.2.2 Ceiling Mounting with Gang Box

Steps:

1. Disassemble the camera. Refer to the section 2.1.
2. Install the gang box in the ceiling.
3. Attach the mounting base to the gang box with two screws.

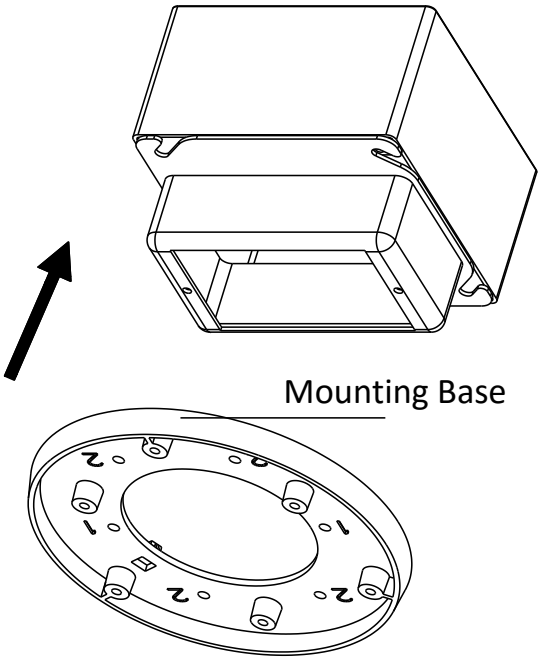

Figure 2-8 In-ceiling Mount

4. Route the cables through the hole in the center of the mounting base.
5. Align the camera with the mounting base.
6. Tighten the screws to secure the camera with the mounting base.
7. Connect the video output connector to the monitor. Connect the power connector to the power supply.
8. Adjust the image and focus. Please refer to the section 2.3 for more detailed information.

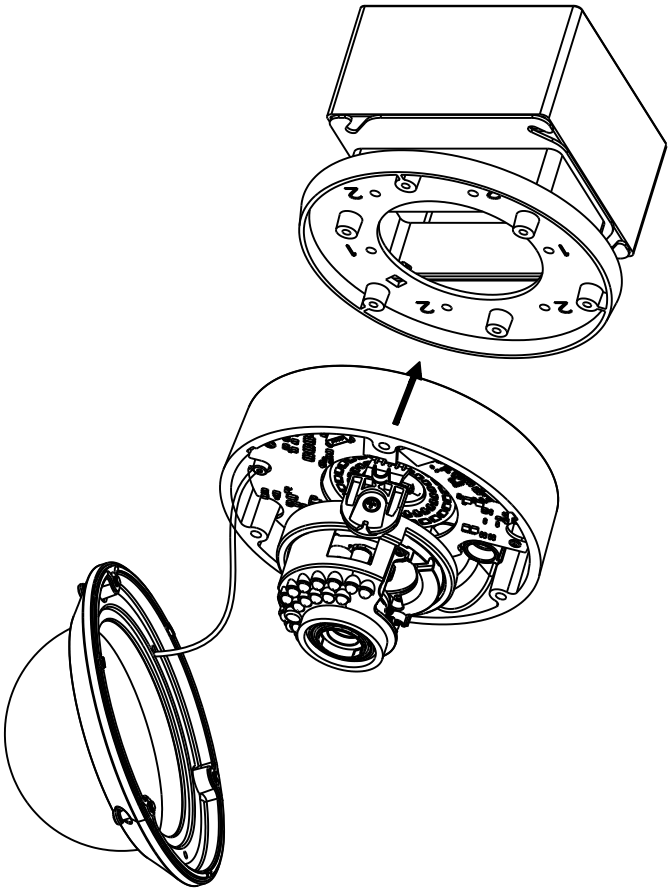

Figure 2-9 Secure Camera

9. Install the inner black liner back to the camera.
10. Align the bubble with the camera.
11. Tighten the screws to secure the bubble with the camera as shown in Figure 2-10.

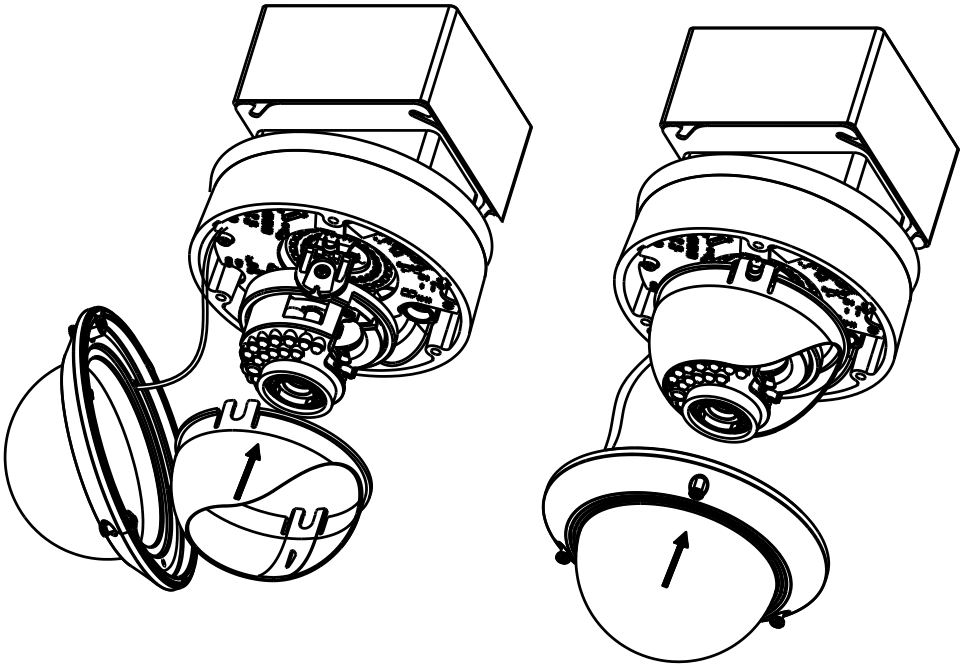

Figure 2-10 Secure the Bubble

2.2.3 Wall Mounting

For the wall mounting, you have to purchase a wall mount.

Steps:

1. Disassemble the camera. Refer to the section 2.1.
2. Install the wall mount and mounting adapter as shown in Figure 2-11.
3. Align the screw holes of the mounting base with the corresponding screw holes of the mounting adapter.
4. Secure the mounting base to the mounting adapter with four screws.

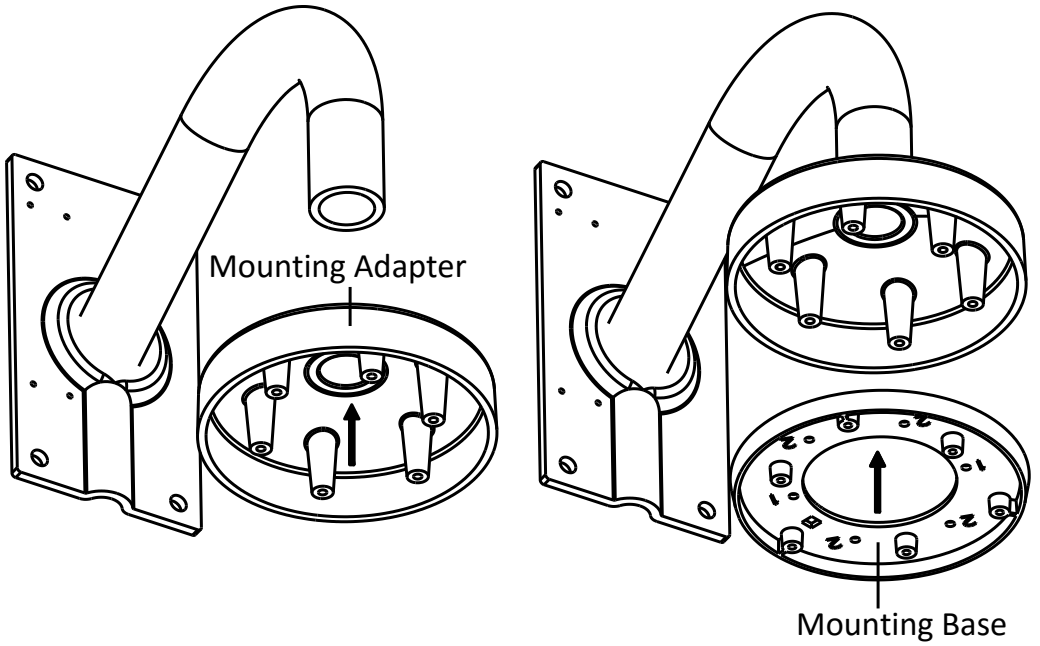

Figure 2-11 Install the Mounting Base

5. Route the cables through the hole in the center of the wall mount.
6. Align the camera with the mounting base.
7. Tighten the set screws to secure the camera with the mounting base.
8. Connect the video output connector to the monitor. Connect the power connector to the power supply.
9. Adjust the image and focus. Please refer to the section 2.3 for more detailed information.

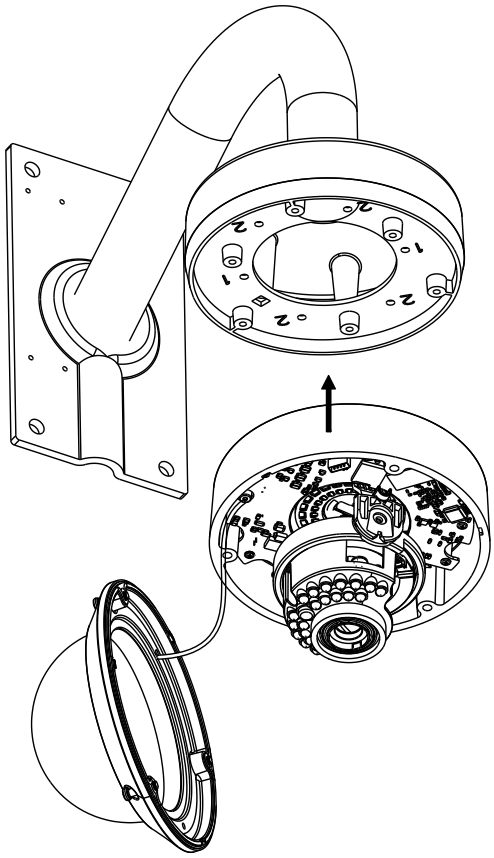

Figure 2-12 Secure Camera

10. Install the inner black liner back to the camera.
11. Align the bubble with the camera.
12. Tighten the screws to secure the bubble with the camera.

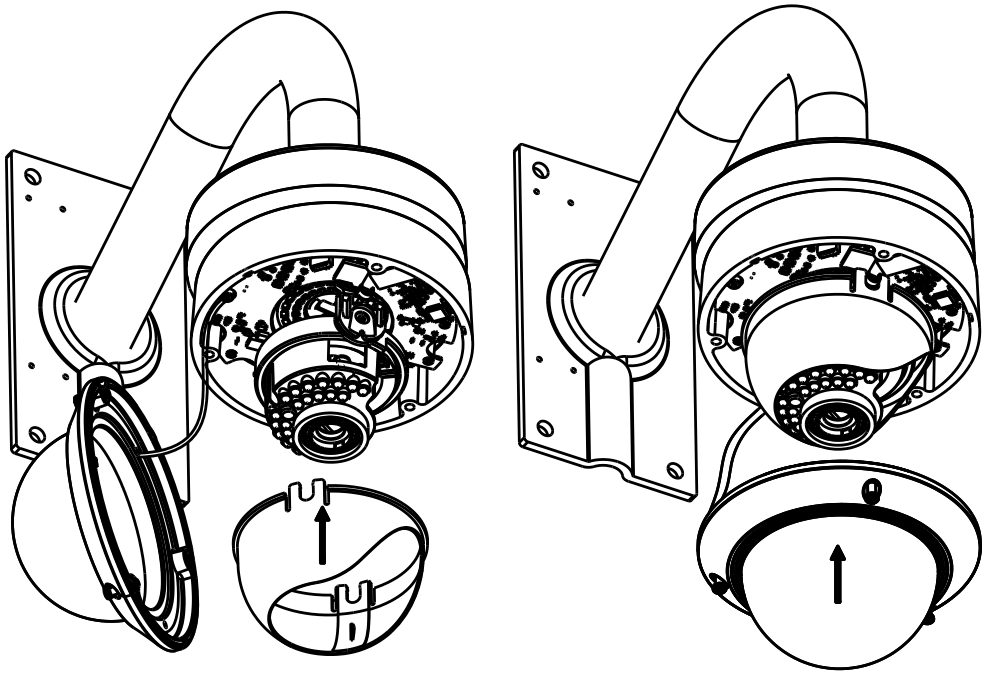

Figure 2-13 Secure Black Liner and Bubble

2.3 **Image and Focus Adjusting**

Steps:

1. 3-axis adjustment.
   1). View the camera image using the monitor.
   2). Rotate the panning table to adjust the panning position of the camera.
   3). Rotate the tilting axes to adjust the tilting position of the camera.
   4). Rotate the lens table to adjust the azimuth angle of the image.

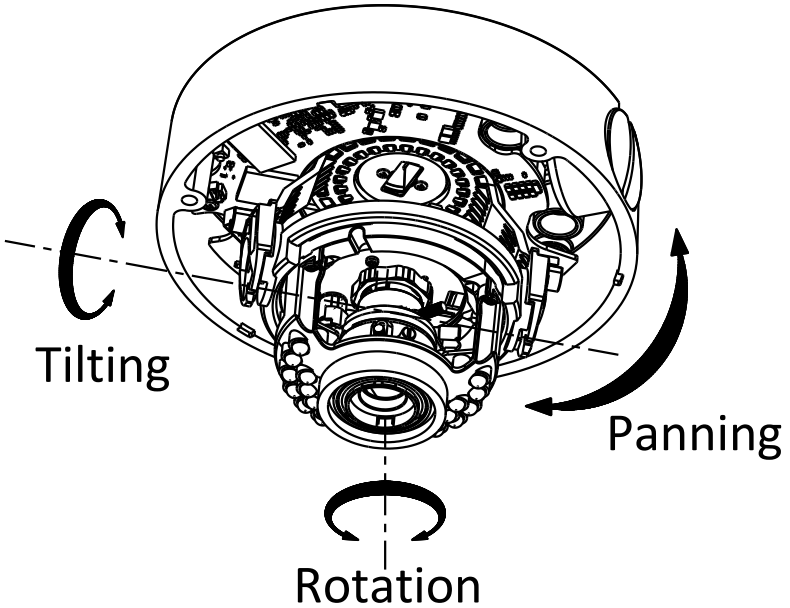

Figure 2-14 3-axis Adjustment

2. Zoom and focus adjustment.

   1). View the camera image using the monitor.

   2). Loosen the zoom lever and move the lever between T (Tele) and W (Wide) to obtain the appropriate angle of view.

   3). Tighten the zoom lever.

   4). Loosen the focus lever and move the lever between F (Far) and N (Near) to obtain the optimum focus.

   5). Tighten the focus lever.

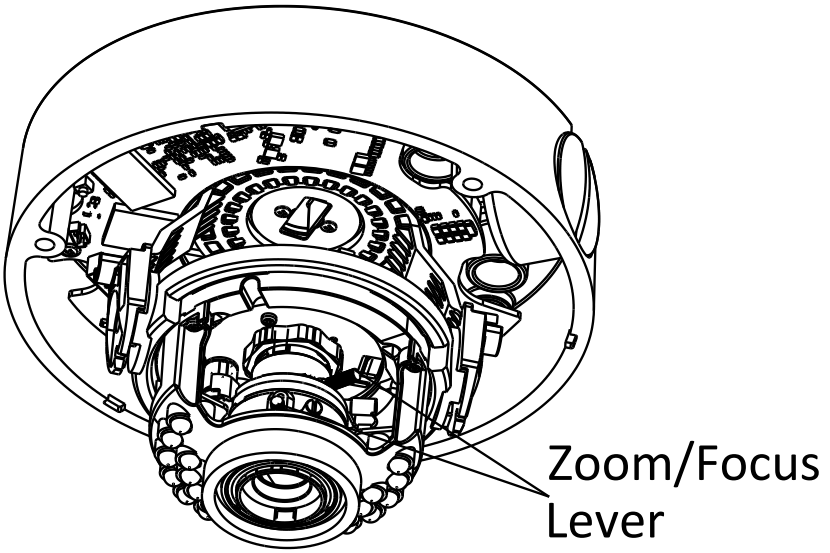

Figure 2-15 Lens Adjustment

3 Setting the Network Camera over the LAN

Purpose:

To view and configure the camera via LAN (Local Area Network), you need to connect the network camera in the same subnet with your PC. Then, install the SADP or client software to search and change the IP of network camera.

The following figure shows the cable connection of network camera and PC:

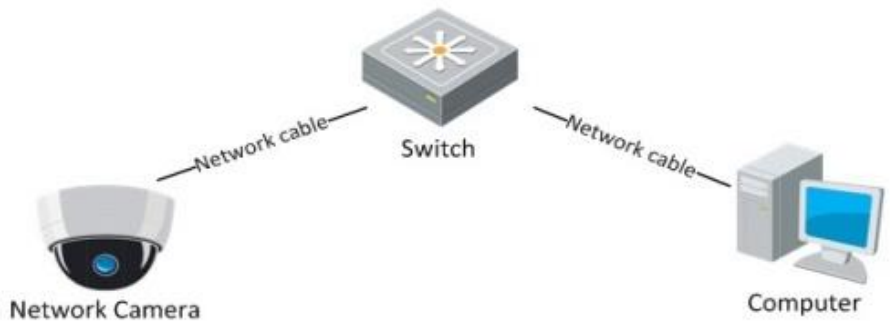

Figure 3-1 Wiring over LAN

Set the IP address of the camera for accessing via LAN.

Steps:

1. To get the IP address, you can choose either of the following methods:

- ☐ Use SADP, a software tool which can automatically detect network camera in the LAN and list the device information like IP address, subnet mask, port number, device serial number, device version, etc., shown in 0.

- ☐ Use client software and to list the online devices. Please refer to the user manual of client software for detailed information.

2. Change the IP address and subnet mask to the same subnet as of your PC.

   Refer to the following introductions to set IP address with SADP software:

- ☐ **Search active devices online**

  Search online devices automatically:

  After launch the SADP software, it automatically searches the online devices every 15 seconds from the subnet where your computer locates. It displays the total number and information of the searched devices in the Online Devices interface. Device information including the device type, IP address, port number, gateway, etc. will be displayed.

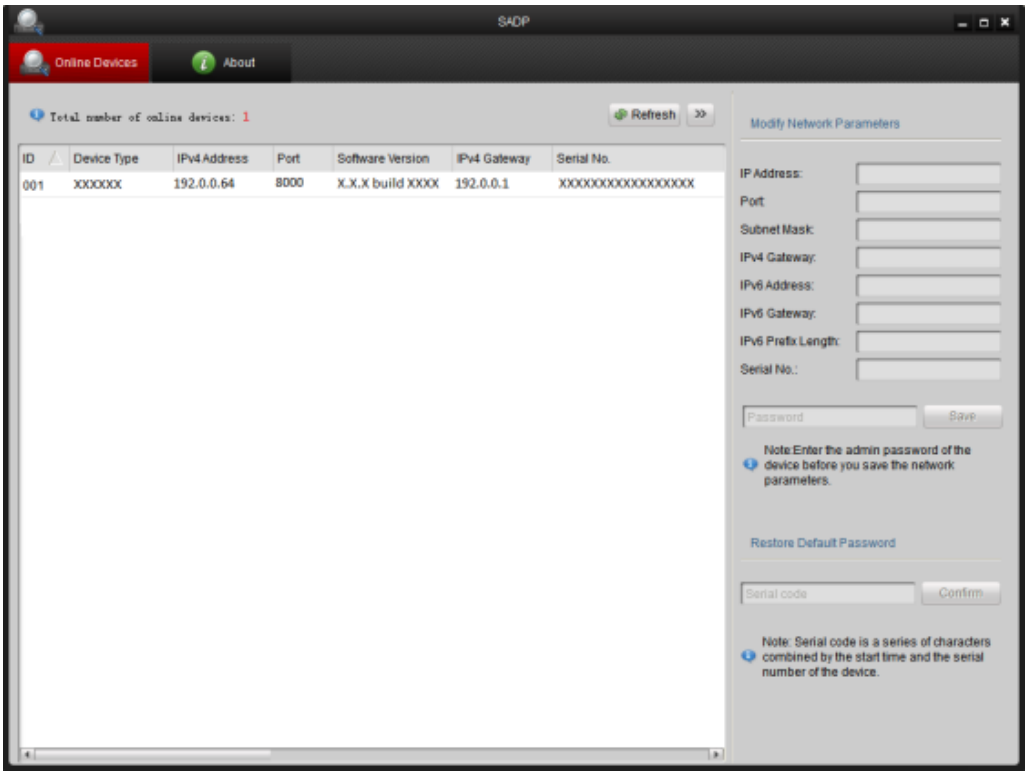

Figure 3-2 Search Online Devices

Device can be searched and displayed in the list in 15 seconds after it goes online; it will be removed from the list in 45 seconds after it goes offline.

Search online devices manually:

You can also click 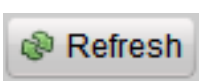

to refresh the online device list manually. The newly searched devices will be added to the list.

NOTE

You can click △ or ▽ on each column heading to order the information; you can click » to show the device table and hide the network parameter panel on the right side, or click « to show the network parameter panel.

☐ Modify device information

Steps:

1). Select the device to be modified in the device list as shown in Figure 3-3. The network parameters of the device will be displayed in the Modify Network Parameters panel on the right side as shown in Figure 3-4.

Edit the modifiable network parameters, e.g. IP address and port number.

Enter the password of the admin account of the device in the Password field and click **Save** to save the changes.

Figure 3-3 Select a Device

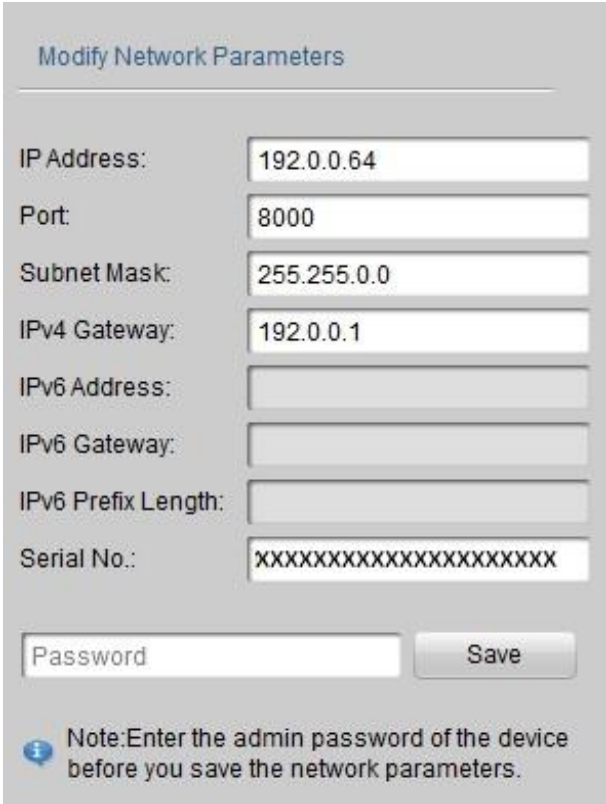

Figure 3-4 Modify Network Parameters

3. Enter the IP address of network camera in the address field of the web browser to view the live video.

NOTE

The default value of the IP address is “192.0.0.64”. The default user name is “admin”, and password is “12345”.

For accessing the network camera from different subnets, please set the gateway for the network camera after you log in.

4 Accessing via Web Browser

System Requirement:

Operating System: Microsoft Windows XP SP1 and above version / Vista / Win7 / Server 2003 / Server 2008 32bits

CPU: Intel Pentium IV 3.0 GHz or higher

RAM: 1G or higher

Display: 1024×768 resolution or higher

Web Browser: Internet Explorer 6.0 and above version, Apple Safari 5.02 and above version, Mozilla Firefox 3.5 and above version and Google Chrome8 and above version

Steps:

1. Open the web browser.
2. In the browser address bar, input the IP address of the network camera, e.g., 192.0.0.64 and press the **Enter** key to enter the login interface.
3. Input the user name and password.
4. Click **Login**.

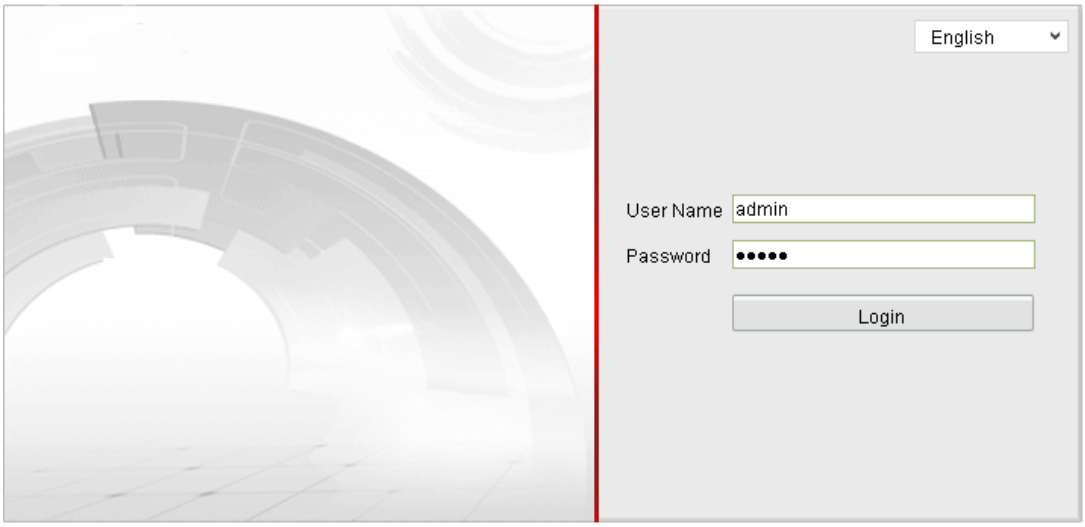

Figure 4-1 Login Interface

5. Install the plug-in before viewing the live video and managing the camera. Please follow the installation prompts to install the plug-in.

NOTE

You may have to close the web browser to finish the installation of the plug-in.

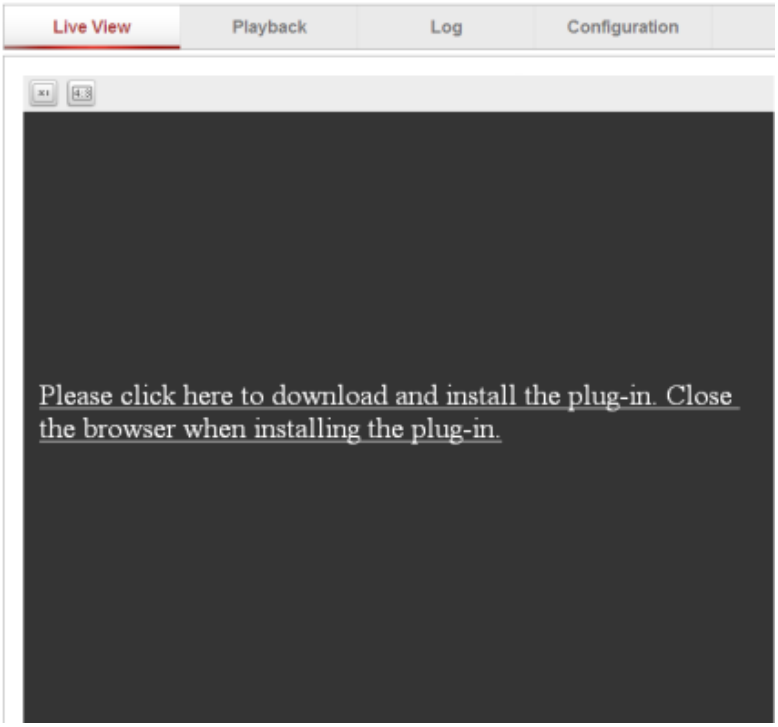

Figure 4-2 Download Plug-in

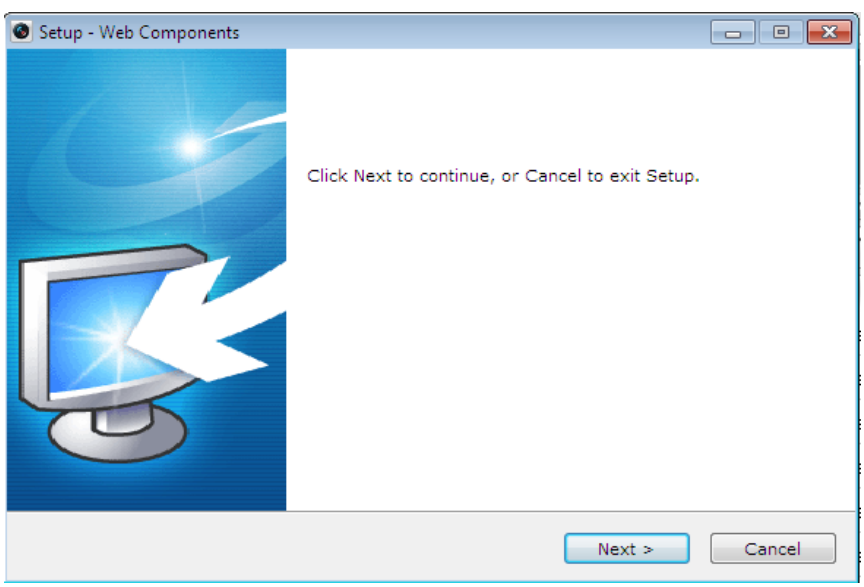

Figure 4-3 Install Plug-in(1)

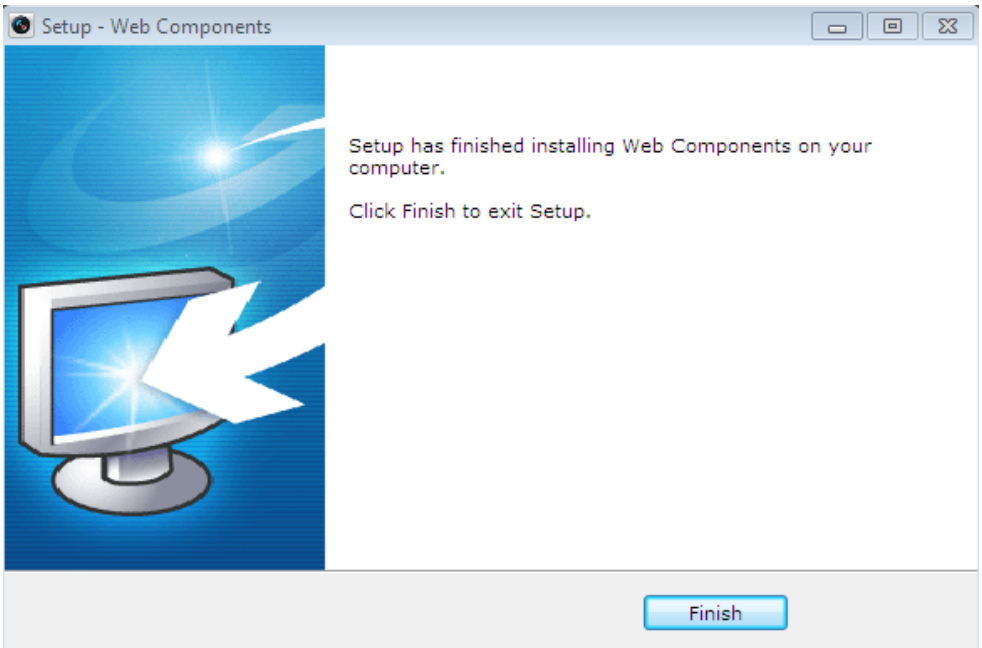

Figure 4-4 Install Plug-in(2)

6. Reopen the web browser after the installation of the plug-in and repeat the steps 2-4 to login.

NOTE

For detailed instructions of further configuration, please refer to the user manual of network camera.